USB bus convert chip CH341

English DataSheet
Version:2D
http://wch.cn
http://wch-ic.com

1. Introduction

CH341 is a USB bus convert chip, providing UART, printer port, parallel and synchronous serial with 2-wire or 4-wire through USB bus.

In UART mode, CH341 provides alternant rate control signals such as serial transfer enable, serial receive in ready etc. It also supplies common MODEM communication signal in order to expand UART for computer or upgrade common synchronous interface device to USB bus directly.

In printer port mode, CH341 supplies standard USB printer port which compounds USB relevant protocol and Windows operate system used to upgrade ordinary parallel printer to USB bus directly.

In parallel mode, CH341 gives out 8-bit parallel in EPP or MEM mode. It can be used to input/output data directly without MCU/DSP.

Besides, CH341A also supports some common synchronous serial such as 2-wire (SCL, SDA) and 4-wire (CS, SCK/CLK, MISO/SDI/DIN and MOSI/SDO/DOUT) interface.

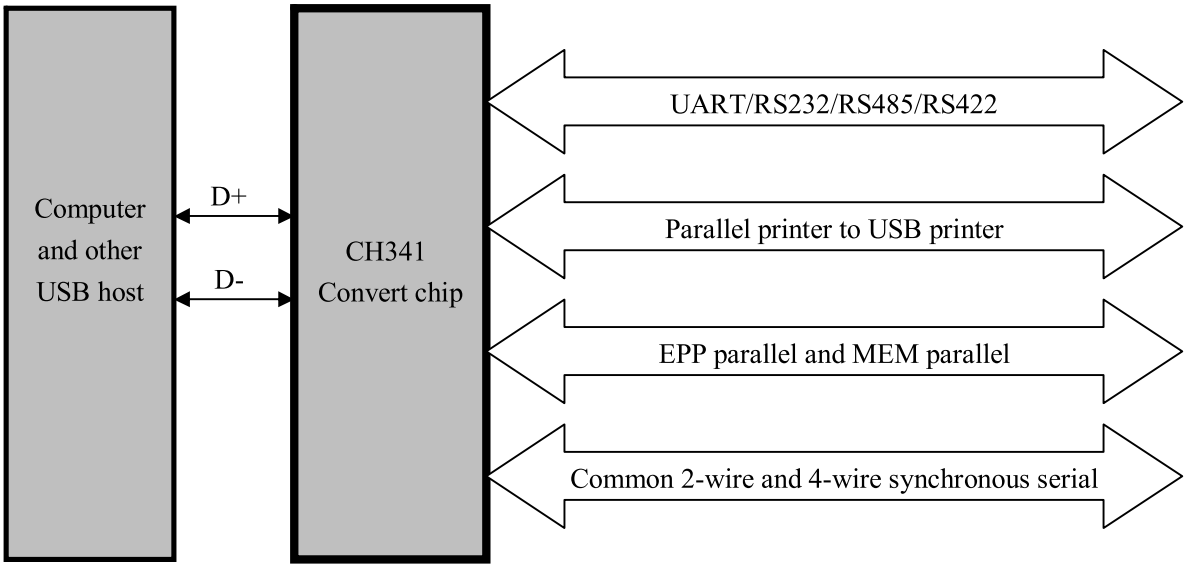

2. Features

2.1.Introduction

- Full speed USB device interface, conforms to USB Specification Version 2.0, only needs crystal and capacitance external.
- Optional: define Vender ID, production ID and list number through external low-cost serial EEPROM.
- Supports 5V and 3.3V power source.
- Low-cost, directly convert serial peripheral equipment, parallel printer and parallel peripheral equipment.
- SOP-28 and SSOP-20 package lead free, compatible with RoHS.
- Only compatible with application layer because interfaces are diverted via USB.

2.2. UART

- Simulate standard serial used to upgrade serial peripheral equipment or increase extra serial via USB.
- Totally compatible with serial application program of computer Windows operation system.
- Hardware full-duplex serial, on-chip transform and receive buffer, supports 50bps~2Mbps communication baud rate.
- Supporting five, six, seven or eight data bits, supporting odd, even, blank, token and no check.
- Supporting serial transfer and receive enable and serial receive ready etc transfer speed control signal and MODEM liaison signal.
- Providing RS232, RS485 and RS422 interface through adding level switch equipment external.
- Supporting indirectly access to outside serial EEPROM memory through standard serial communication.

2.3. Printer port

- Standard USB printer port used to upgrade parallel printer, conforms to relevant USB specification.
- Compatible with Windows operation system, totally compatible with application program under Windows 2000 and XP without drive program.
- Supports various standard parallel printers, low-speed and high-speed print mode are optional.
- Supports bi-directional communication of IEEE-1284 specification, supports single directional and bi-directional transfer printer.

2.4. Parallel

- Providing two interface mode: EPP and MEM.
- EPP mode supplies AS#, DS# and WR# etc signal, similar with EPP V1.7 or EPP V1.9.
- MEM mode supplies A0, RD# and WR# etc signal, similar with memory read/write mode.

2.5. Synchronous serial

- Adopts FlexWire™ technology, realize various 2-wire to 5-wire synchronous serial via software.
- As Host/Master endpoint, supports 2-wire and 4-wire etc common synchronous serial.
- 2-wire interface supplies SCL and SDA signal wire, supports four kinds of transfer speed.

3. Package

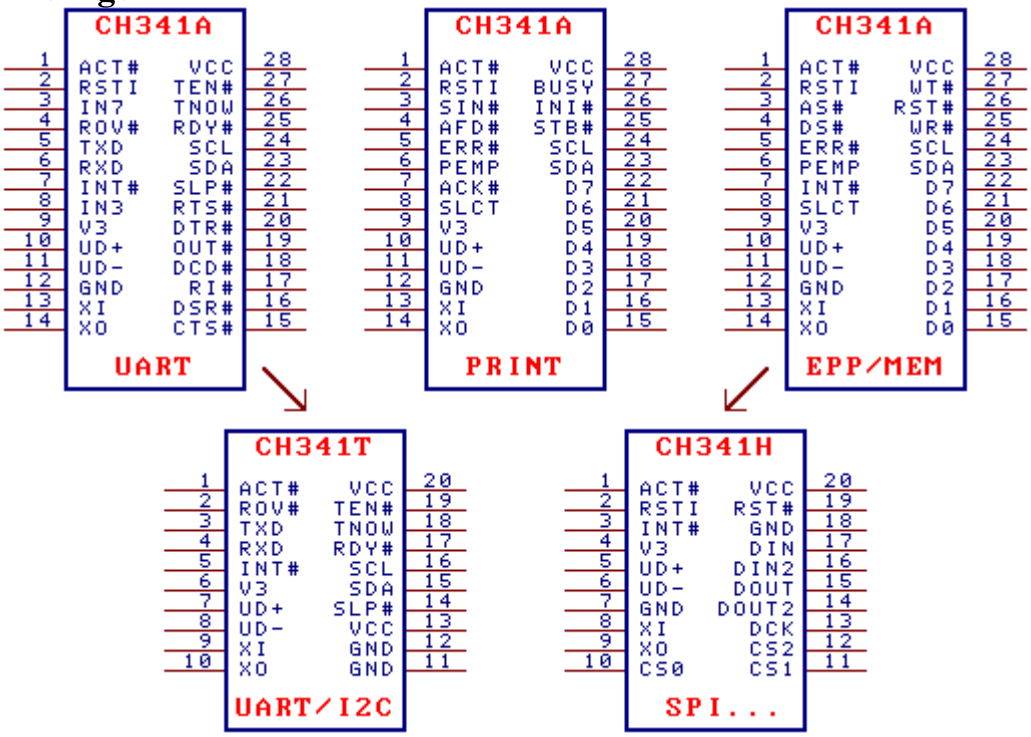

Package shape	Width of plastic		Pitch of Pin		Instruction of package	Ordering type
SOP-28	7.62mm	300mil	1.27mm	50mil	Small outline package of 28-pin	CH341A
SSOP-20	5.30mm	209mil	0.65mm	25mil	Shrink small outline package of 20-pin	CH341T
SSOP-20	5.30mm	209mil	0.65mm	25mil	Shrink small outline package of 20-pin	CH341H

Note: CH341T is only used to USB convert to serial interface or USB convert to 2-wire interface, CH341H is only used to USB convert to 4-wire interfaces etc. (such as SPI)

4. Pins

4.1.General explanation

The detail function of CH341 is decided by function configuration after reset. The same pin may have different define under different function.

CH341T and CH341H adopts SSOP-20 package, the simple vision of CH341A, the pins with same pin name have the same function of them. The multiply VCC pins parallel connect as VCC and multiply GND pins parallel connect as GND in CH341T and CH341H.

4.2.Standard public pins

Pin No.			Pin Name	Pin Type	Pin Description
341A	341T	341H			
28	13,20	20	VCC	POWER	Positive power input port, requires an 0.1uF power decoupling capacitance
12	11,12	7,18	GND	POWER	Public ground, ground connection for USB bus
9	6	4	V3	POWER	Attachment of VCC input external power while 3.3V;connects of 0.01uF decoupling capacitance outside while 5V
13	9	8	XI	IN	Input of crystal oscillator, attachment of crystal and crystal oscillator capacitance external
14	10	9	XO	OUT	Opposite output of crystal oscillator, attachment of crystal and crystal oscillator capacitance outside
10	7	5	UD+	USB signal	Directly connects to D+ data wire of USB bus
11	8	6	UD-	USB signal	Directly connects to D- data wire of USB bus
1	1	1	ACT#	OUT	After USB device configuration output status, low active
2	No	2	RSTI	IN	Input of external reset, active with high-level, with pull-down resistor
24	16	No	SCL	Drain open Output	Output of chip function configuration, with pull-up resistor, connect with SCL of serial EEPROM configuration chip
23	15	No	SDA	drain open OUT/IN	Input of chip function configuration, with pull-up resistor, connect with SDA of serial EEPROM configuration chip

4.3.Asynchronous serial interface pins

Pin No.		Pin Name	Pin Type	Pin Description
341A	341T			
5	3	TXD	OUT	Serial data output
6	4	RXD	IN	Serial data input, with pull-up resistor
27	19	TEN#	IN	Serial transfer enable, active with low-level, with pull-up resistor
25	17	RDY#	OUT	Serial receive is ready, low-level active
26	18	TNOW	OUT	Indicate serial interface transfer is carrying out, high-level active
4	2	ROV#	Tri-state Output	Serial receive buffer overflow, low-level active
15	No	CTS#	IN	MODEM liaison input signal, clear transfer, low-level active
16	No	DSR#	IN	MODEM liaison input signal, data equipment is ready, low-level active
17	No	RI#	IN	MODEM liaison input signal, indication with bell, low-level active
18	No	DCD#	IN	MODEM communication input signal, carrier wave detection, low-level active
20	No	DTR#	Tri-state Output	MODEM liaison output signal, data terminal ready, low-level active
21	No	RST#	Tri-state Output	MODEM liaison output signal, request transferring, low-level active
19	No	OUT#	Tri-state Output	Self-define common output signal, low-level active
7	5	INT#	IN	Self-define interrupt request, rising edge active, with pull-up resistor
8	No	IN3	IN	Self-define common input signal, un-connection is recommended
3	No	IN7	IN	Self-define common input signal, un-connection is recommended
22	14	SLP#	Tri-state Output	Sleep state output signal, low-level active

4.4.Print interface mode pins

341A Pin No.	Pin Name	Pin Type	Pin Description
22~15	D7~D0	Tri-state Output	8-bit parallel data output, connect to DATA7~DATA0
25	STB#	OUT	Data strobe output, low-level active, connect to STROBE
4	AFD#	OUT	Automatically feed output, low-level active, connect to AUTO-FEED

26	INI#	OUT	Initialize printer, low-level active, connect to INIT
3	SIN#	Tri-state Output	Select printer, low-level active, connect to SELECT-IN
5	ERR#	IN	Error with printer, low-level active, with pull-up resistor, connect to ERROR or FAULT
8	SLCT	IN	Printer is selected, high-level active, with pull-up resistor, connect to SELECT or SLCT
6	PEMP	IN	Printer is short of papers, high-level active, connect to PEMPTY or PERROR
7	ACK#	IN	Printer data receive answer, active with rising edge, with pull-up resistor, connect to ACK
27	BUSY	IN	Printer is busy, high-level active, with pull-up resistor, connect to BUSY

4.5.Parallel mode pins

341A Pin No.	Pin Name	Pin Type	Pin Description
22~15	D7~D0	Bi-directional tri-state	8-bit bi-directional data bus, with pull-up resistor
25	WR#	OUT	EPP mode: indicate write operation, write with low-level, read with high-level
			MEM mode: write strobe output WR#, low-level active
4	DS#	OUT	EPP mode: data operation select, low-level active
			MEM mode: read strobe output RD#, low-level active
26	RST#	OUT	Reset output, low-level active
3	AS#	Tri-state Output	EPP mode: address operation strobe, low-level active
			MEM mode: address wire output ADDR or A0
27	WAIT#	IN	CH341A: request to wait, low-level active, with pull-up resistor
7	INT#	IN	Interrupt request input, active with rising edge, with pull-up resistor
5	ERR#	IN	Self-define common input, with pull-up resistor
8	SLCT	IN	Self-define common input, with pull-up resistor
6	PEMP	IN	Self-define common input, with pull-up resistor

4.6.Synchronous serial interface pins

Pin No.		Pin Name	Pin Type	Pin Description
341A	341H			
22	17	DIN	IN	4-wire serial data input, with pull-up resistor
21	16	DIN2	IN	5-wire serial data input 2,with pull-up resistor
20	15	DOUT	Tri-state Output	4-wire serial data output, other name is MOSI or SDO
19	14	DOUT2	Tri-state	5-wire serial data output 2

			Output	
18	13	DCK	Tri-state Output	4-wire/5-wire serial interface clock output, other name is SCK
17~15	12~10	CS2~CS0	Tri-state Output	4-wire serial interface chip select output 2#~0#
24	No	SCL	Drain open Output	2-wire serial interface clock output, with pull-up resistor
23	No	SDA	Drain open OUT/IN	2-wire serial interface data input/output, with pull-up resistor
26	19	RST#	OUT	Reset output, low-level active
7	3	INT#	IN	Interrupt request input, active with rising edge, with pull-up resistor
5,8,6	No		IN	Self-define common input, with pull-up resistor

5. Function explanation

5.1.General explanation

The data in this manual has three types. Binary numbers are followed by a “B”. Hexadecimal numbers are followed by an “H”. Numbers without annotations are decimals.

CH341 is a convert chip of USB bus, providing asynchronous serial interface, standard USB printer port, parallel interface and synchronous serial interface. The manual mainly supplies asynchronous serial interface and printer port explanation. The introduction of parallel interface and asynchronous serial interface can refer to the second manual.

5.2.Hardware introduction

Some pins of the CH341 have many functions, so they have different features during reset period and working normally after reset. All the pins with tri-state output have set pull-up resistors internal. They are output pins after chip reset and during the reset time they are forbidden with tri-state output, pull-up resistors supply pull-up current. If necessary, set pull-up resistors or pull-down resistors outside to set default level in relevant pins during reset time. The external resistors are 2KΩ~5KΩ. For example, the tri-state is forbidden of AS# during reset time in parallel interface mode, only depends on pull-up current to retain high-level. In order to avoid disturbing peripheral circuit, a 3KΩ pull-up resistor can add to keep steady high-level.

The ACT# of CH341 is output state of USB device configuration completion. The pin output high-level when USB device is un-configuration or configuration is cancelled. After USB configuration, the pin output low-level. The ACT# pin of CH341 can attach to current-limited resistance LED to indicate relative state of USB device configuration.

CH341 sets USB pull-up resistance internal, UD+ and UD- pin must connect to USB bus directly.

CH341 set power-up reset circuit internal. RSTI is used to input asynchronous reset signal from outside. The CH341 is reset when RETI is high-level; the CH341 will delay about 20mS to reset then step into work normally when the RSTI recover to low-level. In order to reset credibly during power up and decrease disturb from outside, recommend to over connect a 0.47uF capacitance between RSTI and VCC.

Supplies 12MHz clock signal for XI pin to ensure CH341 work normally. In common, the clock signal is generated by inverter in CH341 through oscillating of crystal keeping frequency. A crystal of 12MHz between XI and XO can compose the peripheral circuit and connects an oscillator capacitance to ground respectively.

CH341 support 5V and 3.3V source voltage. When working on 5V source voltage, the VCC input 5V power from outside, and V3 connects to 4700pF or 0.01uF decoupling capacitance. If the work power is 3.3V, connect V3 to VCC, input 3.3V source voltage. The voltage of other circuit which is connected to CH341 is no pass than 3.3V.

5.3.Function configuration

CH341 configures chip function through SCL and SDA, there are two modes: assemble configure directly and peripheral chip configure.

Assemble configure directly connects SCL to SDA to configure function of CH341. The characteristics are list: additional cost is no need, only use default vender ID and production ID etc. In assemble configure directly mode, the information is the same with default value in peripheral chip configure except production ID. And in the inner of CH341H, the SDA is low-level.

State of SCL and SDA	Chip function	Default production ID
SDA and SCL are suspended	USB change to asynchronous serial interface, simulate computer serial interface	5523H
SDA connect to low-level while SCL is suspended	USB change to EPP/MEM parallel interface and asynchronous interface	5512H
Connect SDA to SCL directly	Change parallel interface printer to standard USB printer	5584H

The peripheral chip configure is composed as following: SCL and SDA are as 2-wire synchronous serial interface connect to external serial EEPROM configuration chip, via EEPROM chip define chip function, vender ID, production ID and so on. The configuration chip is 24CXX of 7-bit address, such as: 24C01A, 24C02, 24C04, 24C16 and so on. The features are: define chip function and various pieces of identification information of USB productions flexibly. On-line modify data in serial EEPROM and redefine chip function and various identification information of CH341 via the tool software CH341CFG.EXE in Windows.

In generally, CH341 detects the content of peripheral configuration chip through SCL and SDA. If the content is invalid, accord SCL and SDA to use assemble configure directly. To avoid effect 2-wire synchronous serial interface when using SCL and SDA to configure, the ACT# of CH341 is set to low-level through 2KΩ resistance during configuration time. The CH341 is enforced as EPP/MEM parallel interface and synchronous serial interface, it doesn't detect outside configuration chip forwardly.

The following table is content of peripheral serial EEPROM configuration chip.

Byte address	Shortened form	Explanation	Default value
00H	SIG	The peripheral configuration chip is valid, former byte must be 53H, other value imply the configuration data invalid, use assemble configure directly	53H
01H	MODE	Select communication interface: 23H=serial interface, 12H=print port or parallel interface, other value imply the configuration data invalid, use assemble configure directly	23H or 12H
02H	CFG	Detail configuration, refer to the below table	FEH
03H		(Reserved unit, must be set as 00H or 0FFH	00H
05H~04H	VID	Vender ID, high byte is behind, any value	1A86H

07H~06H	PID	Product ID, high byte is behind, any value	55??H
09H~08H	RID	Release ID, high byte is behind, any value	0100H
17H~10H	SN	Serial number, the size is 8	12345678
7FH~20H	DID	Printer port: defined printer device ID string accord IEEE-1284	00H, 00H
	PIDS	Serial interface or printer port: production explanation string of un-printer	
Others		(Reserved unit)	00H or FFH

The following table is CFG defining detail configuration, explanation is according bit.

Bit address	Shortened form	Explanation	Default value
7	PRT	Select communication interface: for serial interface, the value must be 1 For un-serial interface select: 0=standard USB printer port; 1=parallel interface	1
6	PWR	USB device supply power mode: 0=peripheral and USB; 1=USB bus only	1
5	SN-S	Production serial number string: 0=valid; 1=invalid	1
4	DID-S	Printer's device ID string:0=valid; 1=invalid	1
	PID-S	Product explanation string of un-printer: 0=valid; 1=invalid	1
3	SPD	Data transfer speed of printer port:0=high-speed; 1=low-speed/standard	1
2	SUSP	Automatically suspend and low-cost when USB is not busy, 0=forbid; 1=allow	1
1 0	PROT	Define interface protocol in configuration description sign of USB device: for serial or parallel interface, the valid value is 0 to 3, 0 is recommended, For standard USB printer port: the valid value is 1 and 2, 2 is recommended	1 0

5.4.Asynchronous serial interface

In the asynchronous serial mode the CH341's pins contain: data transfer pin, hardware speed control pin, operation state pin, MODEM communication signal pin and assistant pin.

Data transfer pin consists: TXD and RXD pins. When serial interface is leisure TXD and RXD are high-level.

Hardware speed control pin consists: TEN# and RDY#. TEN# is serial interface transfer enable, when it is high-level, CH341 will stop transfer data from serial interface. Until it is low-level, CH341 will go on transferring data. RDY# is serial interface receive ready. When it is high-level indicate CH341 is not ready to receive data, maybe the chip is reset, USB is un-configure, cancel configuration or serial interface receive buffer is full etc.

Operation state pins consist: TNOW and ROV# pins. TNOW with high-level indicates CH341 is transferring data from serial interface. When the transfer is completed the TNOW is low-level. TNOW can indicate serial interface receive and transfer switch state in semi-duplex serial interface mode. ROV# indicates CH341 internal serial interface receive buffer will overflow or have overflowed and the following data will discard. In common, the receive buffer is not overflow, so the ROV# is high-level.

MODEM communicate signal pins consist: CTS#, DSR#, RI#, DCD# , DTR# and RST# pin. All the MODEM communication signals are controlled and defined by computer applied program, not directly

controlled by CH341. If needing higher-speed to control signal, instead of hardware speed signals.

Assistant pins consist: INT#, OUT#, IN3 and IN7 pin. INT# is a self-defined interrupt request input, when it detects rising edge of the CLK pin, it will inform computer. OUT# is common low-level active output signal and its state is determined by computer applied program. These assistant pins are not standard serial interface and their functions are similar with MODEM communication signals.

CH341 sets separate transceiver buffer internal and supports simplex, semi-duplex and full duplex asynchronous serial communication. Serial data consist of one low-level starting bit, five to nine data bits and one or two high-level stopping bit, supports odd checkout/even checkout/flag checkout/blank checkout. The following communication band rates are supported by CH341: 50,75,100,110,134.5,150,300,600,900,1200,1800,2400,3600,4800,9600,14400,19200,28800,33600,38400, 56000,57600,76800,115200,28000,53600,30400,60800,21600,500000,2000000 and so on. The band rate error of serial transfer signal is less then 0.3% and the allowance receive signals error is not less then 2%.

In the Windows operation system of computer, driver program of CH341 can simulate standard serial interface, the most former serial interfaces applied programs are totally compatible without any modify. In addition, CH341 supports indirectly access to serial EEPROM memory external via standard serial interface communication mode.

CH341 may use to upgrade serial peripheral equipments or add extra serial interface for computer through USB bus. External additional of level switch equipment can supply interface such as RS232,RS485,RS422 and so on.

5.5.Printer interface

The pins of CH341 in printer port can consult interface signals of standard Centronic printer.

CH341 supplies standard USB printer port, conforms to USB specification, IEEE-1284 specification and Windows operation system. There is no need of driver program in Windows 2000, XP and Vista operation system of computer. (The truth is that Windows takes driver program itself). All driver program and applied program supported print are compatible and without and amending.

Printer ports in CH341 support two kinds of interface protocol of USB printer. The two kinds of interface protocol can be defined in external EEPROM configuration chip and be point out through configuration description sign in USB device: PROT=1 indicates single directional transfer interface while PROT=2 indicates bi-directional transfer interface. In default, CH341 selects bi-directional transfer interface because the data transfer speed is higher than single directional transfer interface according to IEEE-1284 specification.

CH341 printer ports support two kinds data transfer speed: the low speed print mode (standard print mode) and high-speed print mode. In the low speed mode, CH341 needs to detect answer clock ACK# and busy signal BUSY of printer. The effective width of data select pulse STB# is 1uS. Data transfer speed is 500KB/S in ideal. In the high-speed mode, the effective width of data select pulse STB# is 0.5uS. Data transfer speed is 800KB/S in ideal.

CH341 changes various criterions parallel interface printer to USB printer.

6. Parameter

6.1. Absolute maximum rating (Stresses above those listed can cause permanent damage to the device. Exposure to maximum rated conditions can affect device operation and reliability.)

Name	Parameter note		Min.	Max.	Units
TA	Ambient operating	VCC=5V	-40	85	℃

	temperature	VCC=V3=3.3V	-40	85	℃
TS	Storage temperature		-55	125	℃
VCC	Voltage source (VCC connects to power, GND to ground)		-0.5	6.5	V
VIO	The voltage of input or output pin		-0.5	VCC+0.5	V

6.2. Electrical parameter (test conditions: TA=25℃, VCC=5V, excluding pin connection of USB bus)
(If the source voltage is 3.3V, multiply 40% of the current parameter)

Name	Parameter note		Min.	Typical	Max.	Units
VCC	Source voltage	V3 doesn't connect to VCC	4.5	5	5.3	V
		V3 connect to VCC	3.3	3.3	3.6	V
ICC	Total source current when working			15	30	mA
ISLP	Total source current when USB suspending		0.05	0.15	0.5	mA
VIL	Input Voltage LOW		-0.5		0.7	V
VIH	Input Voltage HIGH		2.0		VCC+0.5	V
VOL	Output Voltage LOW (draw 4mA current)				0.5	V
VOH	Output Voltage HIGH (output 4mA current) (Output 100uA current during chip reset)		VCC-0.5			V
IUPs	SCL and SDA output current HIGH		100	200	500	uA
IUP	Input current with pull-up resistor internal		30	70	160	uA
IDN	Input current with pull-down resistor internal			-50	-180	uA
VR	Restrict voltage when power-up reset		2.3	2.6	2.9	V

6.3. Basic time sequence parameter (test conditions: TA=25℃, VCC=5V or VCC=V3=3.3V)

Name	Parameter note	Min.	Typical	Max.	Units
FCLK	Frequency of input clock in XI	11.98	12.00	12.02	MHz
TPR	Reset time of power-up		20	40	mS
TRI	Effective signal width of external reset input	100			nS
TRD	Reset delay time of external reset input		30		mS

6.4. Print interface time sequence parameter (test conditions: TA=25℃, VCC=5V or VCC=V3=3.3V, refer to the accessorial image)

Name	Parameter note		Min.	Typical	Max.	Units
TWPRT	STB# low-level width	Low speed	800	840	10000	nS
		High speed	400	420	10000	nS
TSPRT	STB# high-level width	Low speed	800			nS
		High speed	560			nS
TDS	Data to STB# Low set-up time		240			nS
TDH	Data hold time after STB# high		240			nS
TBZ	BUSY low to STB# low		160			nS
TWA	ACK# pulse width		100			nS
TAK	ACK# high to STB# low		160			nS

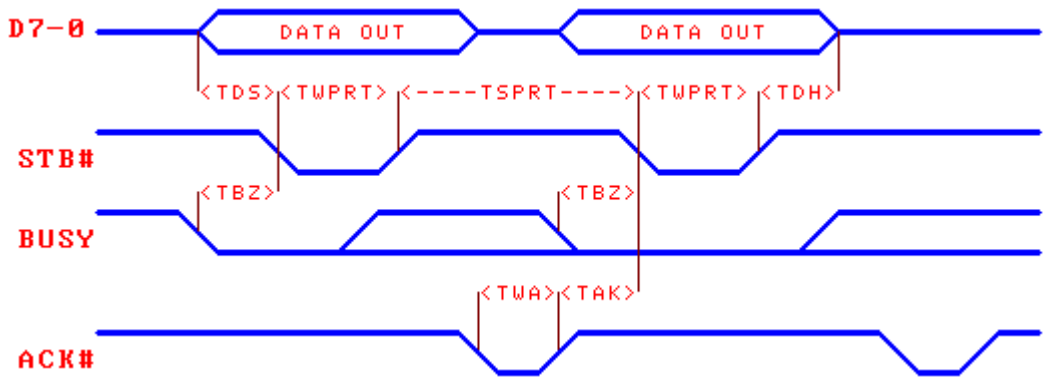

7. Application

7.1. Basic connection (consult following picture)

P3 is USB endpoint, USB bus contains a double 5V source wires and a double data signal wires. Usually, the +5V source wire is red while connects to ground wire is black. D+ signal wire is green, D- signal wire is white. The source current is up to 500mA supplied by USB bus. Generally, CH341 and other low-cost USB productions can use 5V source directly. If USB productions supply common power by other mode, CH341 need to use the common power. If these productions use other common power and USB bus power at the same time, connects 5V power wire of USB bus to 5V common power of USB productions via 1Ω resistance. And join ground wire of the two power devices.

C13 and C14 are monolithic or high frequency ceramic capacitances. The capacity of C13 varies from 4700pF to 0.02uF, eliminates the coupling of inner power of CH341. The capacity of C14 is 0.1uF, eliminates the coupling of external power. The crystal X3、capacitance C11 and C12 are composed of clock oscillating circuit of CH341. Frequency of X3 is 12MHz. C11 and C12 are monolithic or high frequency with capacity of 15pF~30pF capacitances.

If USB production use USB bus power and parallel connects capacitance C15 between VCC and GND, the process of power-up is slow and release power is not in time when cut power, so the CH341 reset is not credible. Over connects a 0.1uF or 0.47uF capacitance C26 between RSTI and VCC to delay reset time is recommended.

When designing the PCB, pay much attention to some notes: decoupling capacitance C13 and C14 must keep near to connection pin of CH341; makes sure D+ and D- are parallel and supply ground or covering copper besides to decrease the disturb from outside signal; the relevant signal leads between XI and XO must be kept as short as possible. In order to lessen the high frequency clock disturb outside, setting ground wire on the circle or covering copper to the relative equipments.

LED L1 and limited current resistance R1 are optional components and can be omit. External serial EEPROM configuration chip U3 is optional equipment, when it is omitted, connects SCL and SDA to select chip function.

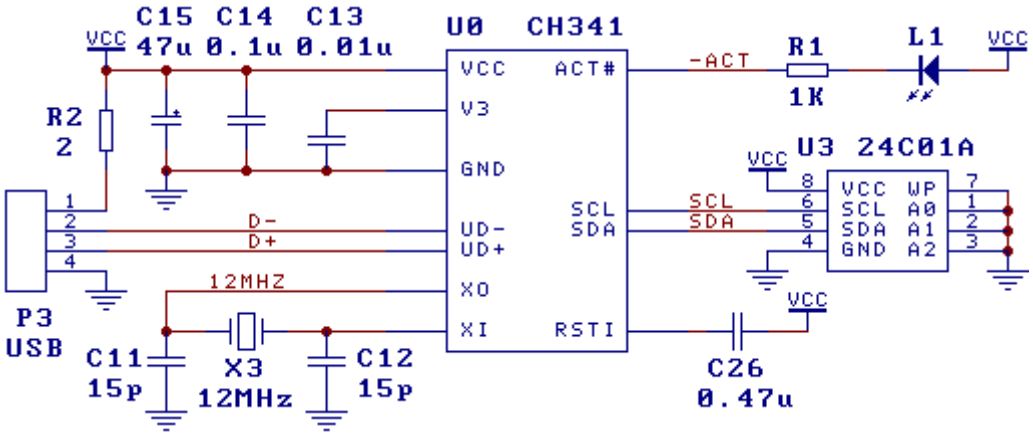

7.2. Convert parallel interface printer (consult the following picture)

In the picture, SDA is connected to SCL, so the CH341 is configured as standard USB printer port, used to change parallel interface printer to USB printer. The right signal wires in the picture are corresponding to signal wire of IEEE-1284 specification or standard Centronic printer port.

In practice, advise consulting IEEE-1284 specification in view of resistance match., adding 2kΩ to 5KΩ pull-up resistance to each signal wires and 20Ω to 40Ω resistance to every signal wire of printer ports then connects to parallel interface printer.

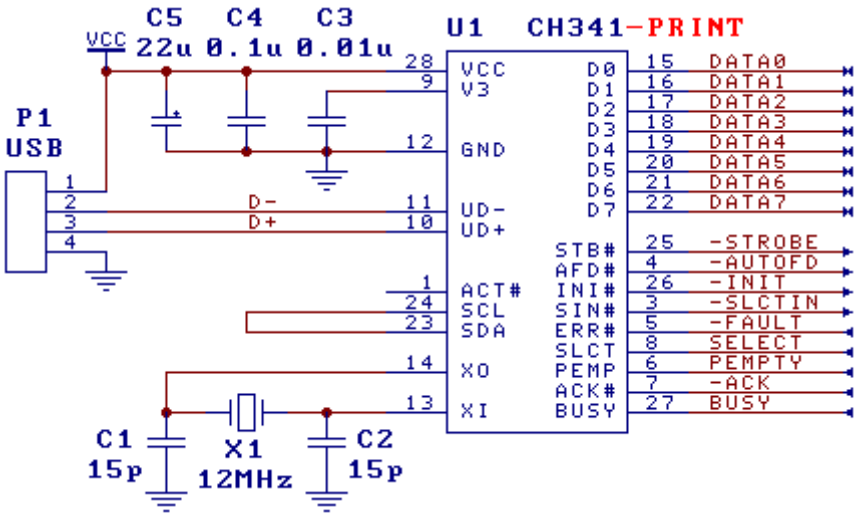

7.3. USB change to TTL asynchronous serial interface (consult the following picture)

SDA and SCL are suspended so the CH341 is configured as asynchronous serial interface. The right signal wires of following picture is corresponding to common serial signals and MODEM signals. Through MC1488/MC1489, MAX232/ICL232 or MAX213/ADM213/ SP213 change TTL level to RS232 level then change to RS232C serial interface.

The right signal wires in the picture can connect RXD, TXD, TEN# and public wires only, other signal wires are optional when using. They can be suspended when not using them. TEN# must connect to low-level or ground because when it is low-level CH341 can transfer.

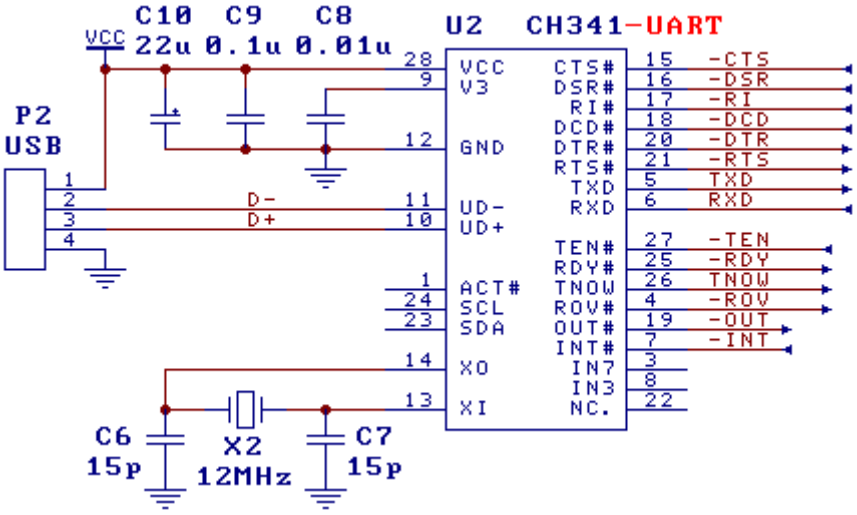

7.4. USB change to 3-wire RS232 serial interface (consult the following picture)

The following picture describes the USB change to RS232 serial interface, and the P6 is needle of DB9. The 3-wire serial interface is basic and common asynchronous serial interface.

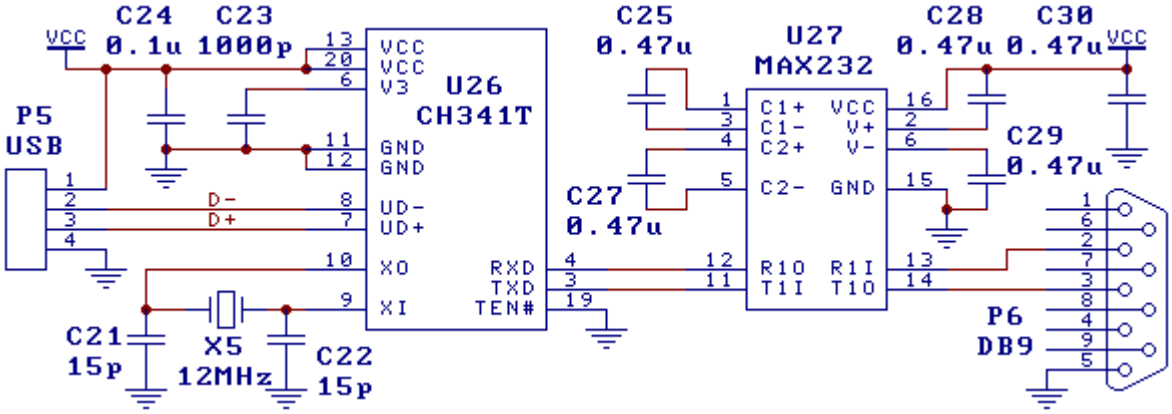

7.5. USB change to RS485 interface (consult the following picture)

Crystal, oscillate capacitance and power decoupling capacitance can refer to basic connection picture. TEN# is connected to ground directly allowing CH341 transfer data through serial interface. TNOW controls bus semi-duplex transceiver U5 of RS485.

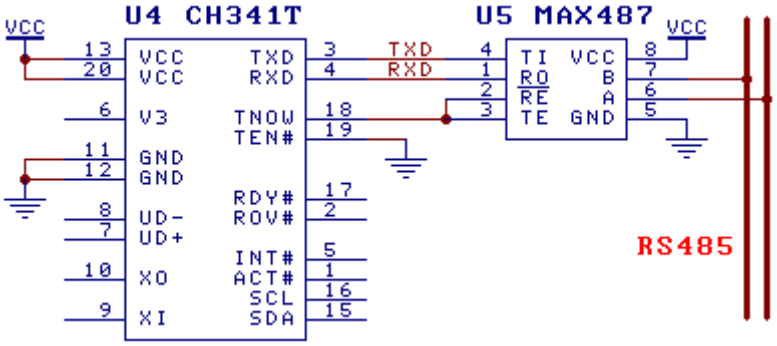

7.6. Connection MCU serial interface (consult the following picture)

The picture realizes USB communication between MCU and computer through serial interface MPU/MCU connects to CH341.

The baud rate of serial interface is high or MCU is too busy to receive, then any output pin of MCU can control TEN# of CH341. When MCU is idle and can receive data set TEN# as low-level. When MCU is busy or not convenient to receive serial interface data set TEN# as high-level to make CH341 pause to send next byte, realize controlling speed.

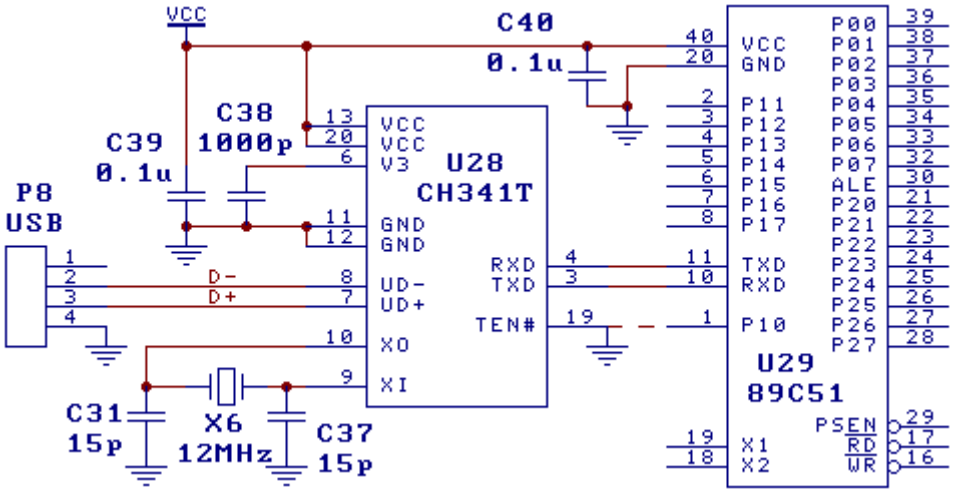

7.7. Serial interface connection (consult the following picture)
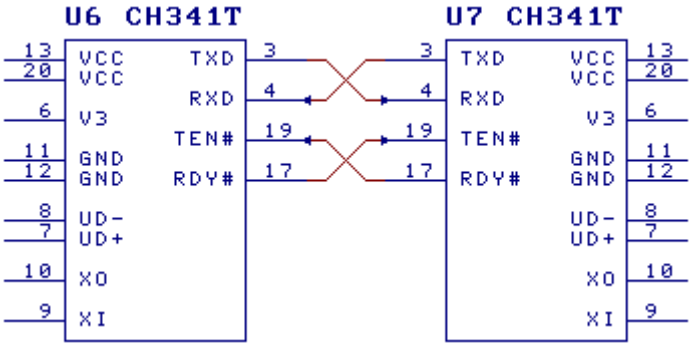
RDY# of the second side connects to TEN# of the opposite side. The opposite side can transfer data until the second is ready. No matter what the serial interface communication speed, the two sides can keep data synchronous avoid to loss data. If the serial interface communication speed is high or the speed of two sides do not match or low speed MCU connects to CH341 serial interface, use hardware to control signal to ensure data synchronous.